* 0019654982601 *

Cambridge Assessment International Education

# Cambridge International AS & A Level

CANDIDATE NAME

CENTRE NUMBER

CANDIDATE NUMBER

*6977722751 2*

**PHYSICS** **9702/33**

Paper 3 Advanced Practical Skills 1 **May/June 2024**

**2 hours**

You must answer on the question paper.

You will need: The materials and apparatus listed in the confidential instructions

**INSTRUCTIONS**

- Answer **all** questions.
- Use a black or dark blue pen. You may use an HB pencil for any diagrams or graphs.
- Write your name, centre number and candidate number in the boxes at the top of the page.
- Write your answer to each question in the space provided.
- Do **not** use an erasable pen or correction fluid.
- Do **not** write on any bar codes.
- You will be allowed to work with the apparatus for a maximum of 1 hour for each question.
- You should record all your observations in the spaces provided in the question paper as soon as these observations are made.
- You may use a calculator.
- You should show all your working and use appropriate units.

**INFORMATION**

- The total mark for this paper is 40.
- The number of marks for each question or part question is shown in brackets [ ].

| For Examiner's Use | |
|---|---|
| 1 | |
| 2 | |
| Total | |

This document has **12** pages. Any blank pages are indicated.


© UCLES 2024

[Turn over

**You may not need to use all of the materials provided.**

**1** In this experiment, you will investigate a balanced metre rule.

You have been provided with a metre rule and some masses.

**(a)** ● Place the masses on the rule as shown in Fig. 1.1.

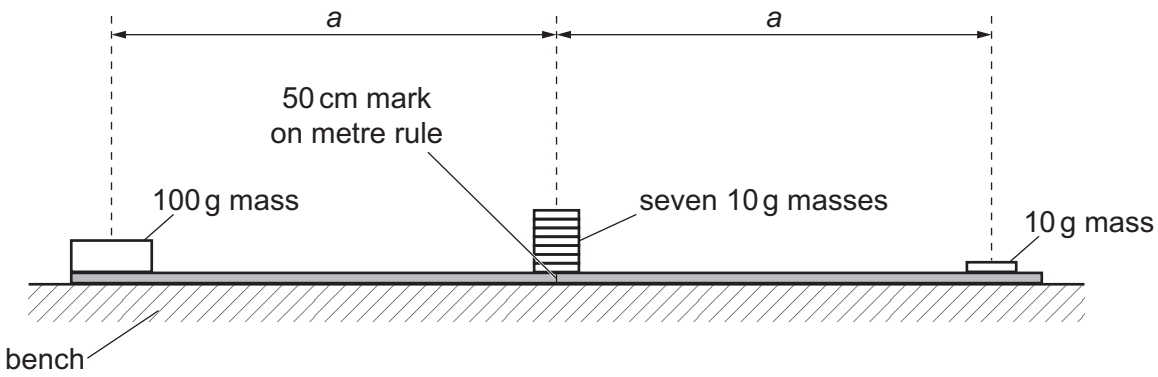


**Fig. 1.1**

- Place the 100 g mass at one end of the rule.
- The distance between the centre of the 100 g mass and the 50 cm mark on the rule is *a*.

  Measure and record *a*.

  *a* = .....
- Place a 10 g mass so that its centre is distance *a* from the 50 cm mark on the rule.
- Secure this mass in place using the adhesive putty. **This mass must remain in place throughout the experiment.**
- Place seven 10 g masses so that their centres are above the 50 cm mark on the rule.

[1]

DO NOT WRITE IN THIS MARGIN
DO NOT WRITE IN THIS MARGIN
DO NOT WRITE IN THIS MARGIN
DO NOT WRITE IN THIS MARGIN
DO NOT WRITE IN THIS MARGIN

**(b)** ● Transfer $n$ of the 10 g masses, where $n = 4$, from the centre of the rule onto the 10 g mass near the end of the rule.

● Carefully place the rule and masses on the pivot as shown in Fig. 1.2.

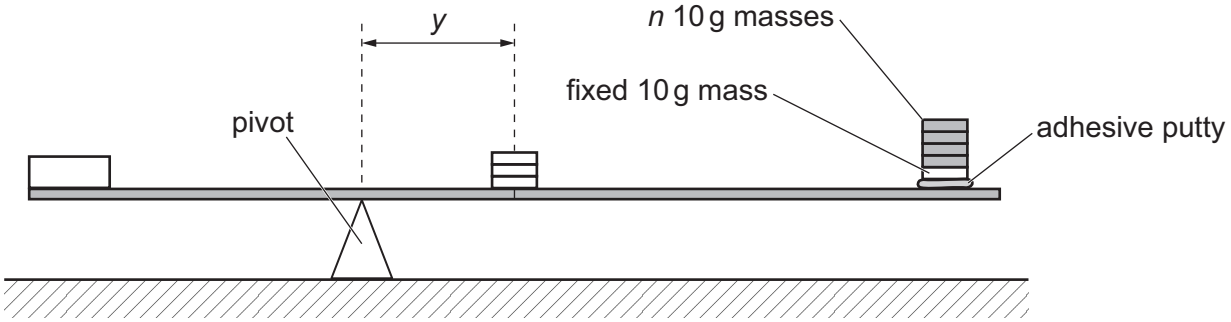


**Fig. 1.2**

● Adjust the position of the rule on the pivot until the rule is balanced.

● The distance between the pivot and the 50 cm mark on the rule is $y$.

Record $n$ and $y$.

$n$ = .....

$y$ = .....

● Remove the rule from the pivot and place it on the bench.

● Return the $n$ 10 g masses to the 50 cm mark.

[1]

DO NOT WRITE IN THIS MARGIN
DO NOT WRITE IN THIS MARGIN
DO NOT WRITE IN THIS MARGIN
DO NOT WRITE IN THIS MARGIN
DO NOT WRITE IN THIS MARGIN

**(c)** Change $n$ by moving some of the 10 g masses from the centre of the rule onto the 10 g mass near the end of the rule and determine $y$.

Repeat until you have six sets of values of $n$ and $y$.

Record your results in a table.

Include values of $\frac{1}{n}$ and $\frac{y}{n}$ to three significant figures.

[9]

**(d) (i)** Plot a graph of $\frac{y}{n}$ on the $y$-axis against $\frac{1}{n}$ on the $x$-axis. [3]

**(ii)** Draw the straight line of best fit. [1]

**(iii)** Determine the gradient and $y$-intercept of this line.

gradient = .....

$y$-intercept = .....

[2]

DO NOT WRITE IN THIS MARGIN

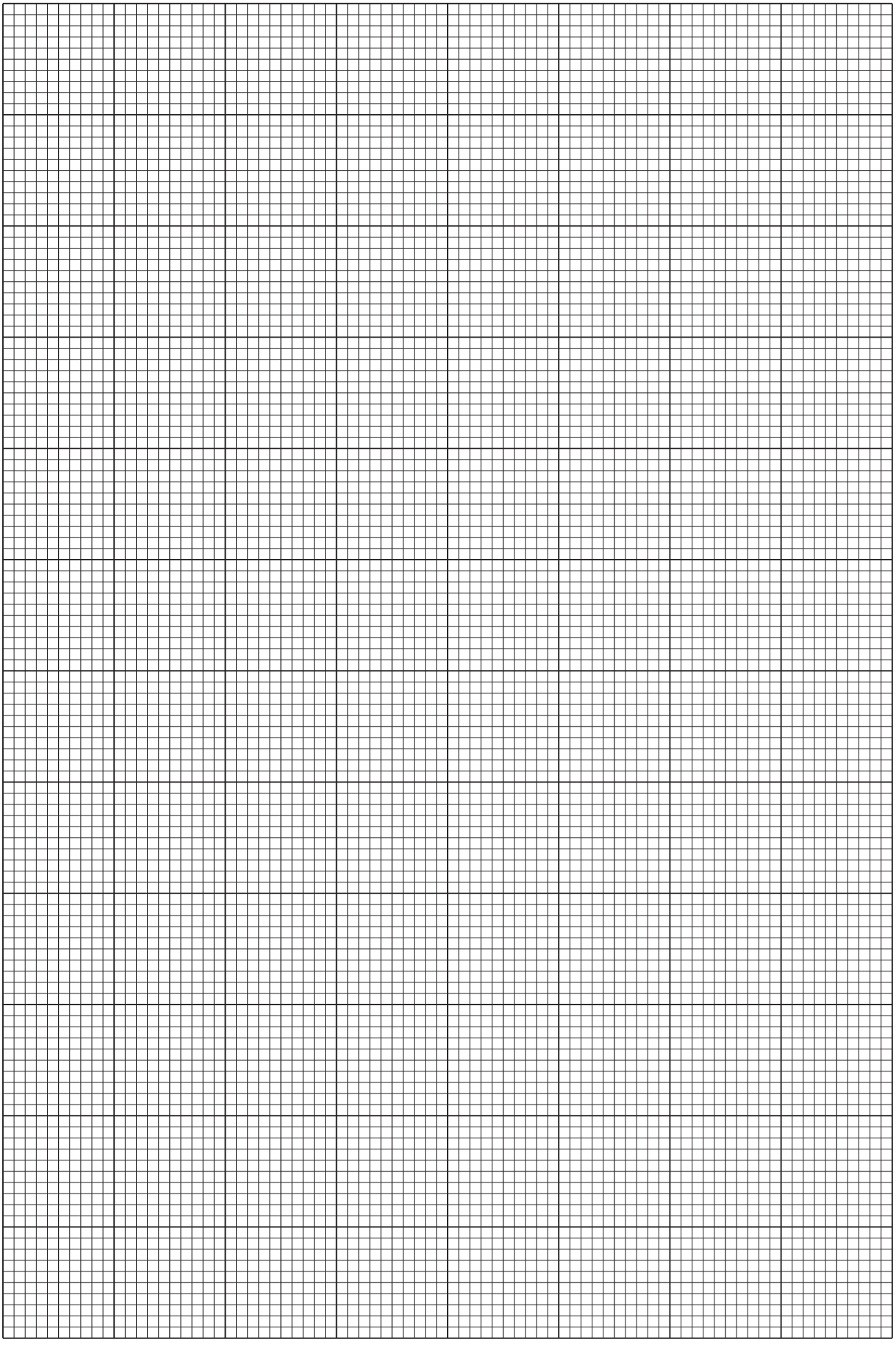

DO NOT WRITE IN THIS MARGIN
DO NOT WRITE IN THIS MARGIN
DO NOT WRITE IN THIS MARGIN
DO NOT WRITE IN THIS MARGIN
DO NOT WRITE IN THIS MARGIN

**(e)** It is suggested that the quantities $y$ and $n$ are related by the equation

$$\frac{y}{n} = \frac{P}{n} - Q$$

where $P$ and $Q$ are constants.

Using your answers in **(d)(iii)**, determine the values of $P$ and $Q$.
Give appropriate units.

$P$ = .....

$Q$ = .....
[2]

**(f)** Theory suggests that

$$P = \frac{9Ma}{18M + R}$$

where $M$ = 10 g and $R$ is the mass of the rule.

Determine the value of $R$.

$R$ = ..... g [1]

[Total: 20]

DO NOT WRITE IN THIS MARGIN
DO NOT WRITE IN THIS MARGIN
DO NOT WRITE IN THIS MARGIN
DO NOT WRITE IN THIS MARGIN
DO NOT WRITE IN THIS MARGIN

**You may not need to use all of the materials provided.**

**2** In this experiment, you will investigate the properties of a rubber band.

**(a) (i)** ● Set up the apparatus as shown in Fig. 2.1.

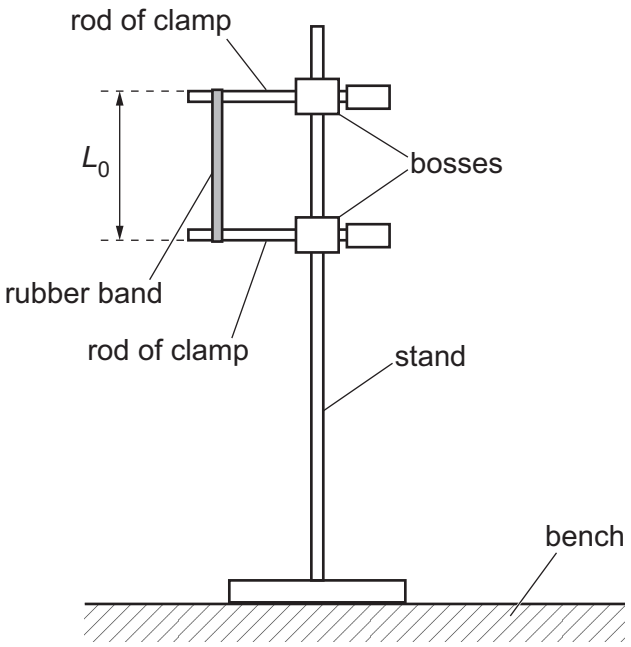


**Fig. 2.1**

● The rubber band should be straight but not stretched.

The distance between the ends of the rubber band is $L_0$, as shown in Fig. 2.1.

Measure and record $L_0$.

$L_0$ = ..... [1]

**(ii)** Estimate the percentage uncertainty in your value of $L_0$. Show your working.

percentage uncertainty = ..... % [1]

DO NOT WRITE IN THIS MARGIN
DO NOT WRITE IN THIS MARGIN
DO NOT WRITE IN THIS MARGIN
DO NOT WRITE IN THIS MARGIN
DO NOT WRITE IN THIS MARGIN

**(b)** The width of the unstretched rubber band is $w_0$ and its thickness is $t$, as shown in Fig. 2.2.

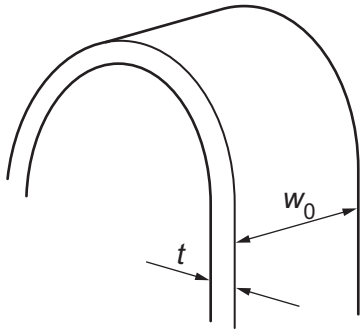


**Fig. 2.2**

Measure and record $w_0$ and $t$.

$w_0$ = .....

$t$ = .....

[2]

**(c) (i)**

- Increase the distance between the clamps until the distance between the ends of the rubber band is approximately $1.5L_0$.
- The distance between the ends of the rubber band is $L$.

  The width of the rubber band is $w$.

  Measure and record $L$ and $w$.

$L$ = .....

$w$ = .....

[1]

**(ii)** Calculate $\Delta L$ and $\Delta w$, where $\Delta L = L - L_0$ and $\Delta w = w_0 - w$.

$\Delta L$ = .....

$\Delta w$ = .....

[1]

**(iii)** Justify the number of significant figures that you have given for your value of $\Delta L$.

.....

.....

..... [1]

DO NOT WRITE IN THIS MARGIN

**(d)**
- Increase the distance between the clamps until the distance between the ends of the rubber band is approximately $2L_0$.
- Measure and record $L$ and $w$.

$L$ = .....

$w$ = .....

- Repeat **(c)(ii)**.

$\Delta L$ = .....

$\Delta w$ = .....

[2]

**(e)** It is suggested that the relationship between $\Delta w$ and $\Delta L$ is

$$\frac{\Delta L}{\Delta w} = k$$

where $k$ is a constant.

Using your data, calculate two values of $k$.

first value of $k$ = .....

second value of $k$ = .....

[1]

DO NOT WRITE IN THIS MARGIN

**(f)** It is suggested that the percentage uncertainty in the values of $k$ is 25%.

Using this uncertainty, explain whether your results support the relationship in **(e)**.

.....

.....

.....

..... [1]

**(g)** The approximate force $F$ acting on the rubber band is given by

$$F = \frac{2Etkw_0\Delta w}{L_0}$$

where the Young modulus $E$ of rubber is $1.0 \times 10^6\,\text{N m}^{-2}$.

Use your second value of $k$ and your value of $\Delta w$ from **(d)** to determine a value for $F$.

$F$ = ..... N [1]

DO NOT WRITE IN THIS MARGIN
DO NOT WRITE IN THIS MARGIN
DO NOT WRITE IN THIS MARGIN
DO NOT WRITE IN THIS MARGIN
DO NOT WRITE IN THIS MARGIN

**(h) (i)** Describe **four** sources of uncertainty or limitations of the procedure for this experiment.

For any uncertainties in measurement that you describe, you should state the quantity being measured and a reason for the uncertainty.

1 .....

.....

2 .....

.....

3 .....

.....

4 .....

.....

[4]

**(ii)** Describe **four** improvements that could be made to this experiment. You may suggest the use of other apparatus or different procedures.

1 .....

.....

2 .....

.....

3 .....

.....

4 .....

.....

[4]

[Total: 20]

DO NOT WRITE IN THIS MARGIN
DO NOT WRITE IN THIS MARGIN
DO NOT WRITE IN THIS MARGIN
DO NOT WRITE IN THIS MARGIN
DO NOT WRITE IN THIS MARGIN

**BLANK PAGE**

DO NOT WRITE IN THIS MARGIN
DO NOT WRITE IN THIS MARGIN
DO NOT WRITE IN THIS MARGIN
DO NOT WRITE IN THIS MARGIN
DO NOT WRITE IN THIS MARGIN

Permission to reproduce items where third-party owned material protected by copyright is included has been sought and cleared where possible. Every reasonable effort has been made by the publisher (UCLES) to trace copyright holders, but if any items requiring clearance have unwittingly been included, the publisher will be pleased to make amends at the earliest possible opportunity.

To avoid the issue of disclosure of answer-related information to candidates, all copyright acknowledgements are reproduced online in the Cambridge Assessment International Education Copyright Acknowledgements Booklet. This is produced for each series of examinations and is freely available to download at www.cambridgeinternational.org after the live examination series.

Cambridge Assessment International Education is part of Cambridge Assessment. Cambridge Assessment is the brand name of the University of Cambridge Local Examinations Syndicate (UCLES), which is a department of the University of Cambridge.